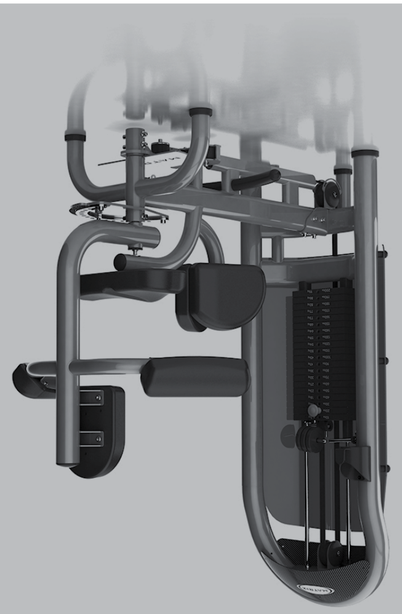

MATRIX

AURA SERIES
G3-S55 ROTARY TORSO

MATRIX
Strong • Smart • Beautiful

MATRIX FITNESS | 1600 LANDMARK DRIVE COTTAGE GROVE WI 53527 USA
Toll Free 866.693.4863 | **matrixfitness.com** | Fax 608.839.8687

PART # 0000000000

REV. 1.1

IMPORTANT SAFETY INFORMATION

It is the sole responsibility of the purchaser of MATRIX products to instruct all individuals, whether they are the end user or supervising personnel on proper usage of the equipment.

It is recommended that all users of MATRIX exercise equipment be informed of the following information prior to its use.

Do not use any equipment in any way other than designed or intended by the manufacturer. It is imperative that MATRIX equipment be used properly to avoid injury.

INSTALLATION

1. STABLE AND LEVEL SURFACE: MATRIX exercise equipment must be installed on a stable base and properly leveled.
2. SECURING EQUIPMENT: Manufacturer recommends that all stationary MATRIX strength equipment be secured to the floor to stabilize equipment and eliminate rocking or tipping over. This must be performed by a licensed contractor.

   All anchor points must be able to withstand 750 lbs. (3.3 kN) pull-out force.

MAINTENANCE

1. DO NOT use any equipment that is damaged and or has worn or broken parts. Use only replacement parts supplied by your country's local MATRIX dealer.
2. MAINTAIN LABELS AND NAMEPLATES: Do not remove labels for any reason. They contain important information. If unreadable or missing, contact your MATRIX dealer for a replacement.
3. MAINTAIN ALL EQUIPMENT: Preventative maintenance is the key to smooth operating equipment as well as keeping your liability to a minimum. Equipment needs to be inspected at regular intervals.
4. Ensure that any person(s) making adjustments or performing maintenance or repair of any kind is qualified to do so. MATRIX dealers will provide service and maintenance training at our corporate facility upon request.

ADDITIONAL NOTES

This equipment should only be used in supervised areas where access and control is specifically regulated by the owner. It is up to the owner to determine who is allowed access to this training equipment. The owner should consider a user's: degree of reliability, age, experience, etc.

This training equipment meets industry standards for stability when used for its intended purpose in accordance with the instructions provided by the manufacturer.

This training equipment is in compliance with EN 957-1 and the relevant portions of EN 957-2 and EN 957-4.

⚠ WARNING

DEATH OR SERIOUS INJURY CAN OCCUR ON THIS EQUIPMENT. FOLLOW THESE PRECAUTIONS TO AVOID INJURY!

1. NEVER allow children on strength training equipment. Teenagers must be supervised at all times while using this equipment.
2. All warnings and instructions should be read and proper instruction obtained prior to use. Use this equipment for its intended purpose ONLY.
3. Inspect the machine before use. DO NOT use machine if it appears damaged or inoperable.
4. NEVER allow resistance straps, ropes or other means to be attached to this equipment, as this may result in serious injury. NEVER use this equipment for support during stretching, as this may result in serious injury.
5. ALWAYS use a spotter.
6. Do not exceed the weight capacity of this equipment.
7. Balance the weight applied to this equipment and/or any barbell. Where applicable, use retention devices to retain weight discs.
8. Injuries to health may result from incorrect or excessive training. Cease exercise if you feel faint or dizzy. Obtain a medical exam before beginning an exercise program.
9. Keep body, hair, clothing, and fitness accessories free and clear of all moving parts.
10. Manufacturer recommends that all equipment be secured to the floor to stabilize and eliminate rocking or tipping over. Use a licensed contractor.
11. DO NOT REMOVE THIS LABEL. REPLACE IF DAMAGED OR ILLEGIBLE.
12. For Smith Machines: Visually ensure lifting bar catch rods are fully engaged and seated in the hooks before releasing the load and exiting the machine.
13. For Smith Machines: ALWAYS set both adjustable stops to the same height when using this machine.
14. Adjustable safety stops, if present, must be used at all times.
15. For equipment with adjustable stops: PROPER adjustable stop height depends on the exercise performed.Adjust as follows:
    - Remove weight from lifting bar.
    - For squats, perform the exercise and determine the lowest comfortable position of the bar that ensures no spinal compression. For other exercises, perform the movement and determine the lowest point of bar travel that is comfortable without the bar contacting your body.
    - Position both stop catches to stop the bar at this point. Ensure that they are completely seated on the stop rods or catch plate.
    - Load weights onto the lifting bar and carefully perform the exercise.
16. When adjusting any adjustable mechanism (seat position, pad location, range of motion limiter, pulley carriage, or any other type of adjuster), make certain that the adjusting pin is fully engaged in the hole to avoid injury.
17. Keep hands and feet clear at all times from moving parts to avoid injury.

PROPER USAGE

1. Do not exceed weight limits of the exercise device.
2. If applicable, set safety stops to appropriate height.
3. If applicable, adjust seat pads, leg pads, foot pads, range of motion adjustment, or any other type of adjustment mechanisms to a comfortable start position. Make certain that the adjusting mechanism is fully engaged to prevent unintentional movement and to avoid injury.
4. Sit on bench (if applicable) and get into appropriate position for exercise.
5. Exercise using no more weight than you can safely lift and control.
6. In a controlled manner, perform exercise.
7. Return weight to its fully-supported start position.

MAINTENANCE CHECKLIST

ACTION	FREQUENCY
Clean Upholstery *	Daily
Inspect Cables	Daily
Clean Guide Rods	Monthly
Inspect Hardware	Monthly
Inspect Frame	Bi-Annually
Clean Machine	As Needed
Clean Grips *	As Needed
Lubricate Guide Rods †	As Needed

* Upholstery & Grips should be cleaned with a mild soap and water or a non-ammonia based cleaner.

† Guide rods should be lubricated with Teflon based lubricant. Apply the lubricant to a cotton cloth and then apply up and down the guide rods.

PRODUCT SPECIFICATIONS

TECH SPECS	
Maximum Training Weight	91 kg / 200 lbs.
Product Weight	216 kg / 476 lbs.
Overall Dimensions (L x W x H)*	165 x 97 x 174 cm / 65" x 39" x 69"

* Ensure a minimum clearance width of 914 mm / 36" for access to and passage around MATRIX strength equipment.

WARRANTY

Valid in North America only	
Frame (not coatings) *	10 years
Weight stacks	5 years
Pulleys	5 years
Pivot bearings	5 years
Any items not specified	3 years
Labor (excluding upholstery/cables/grips)	3 years
Upholstery/cables/grips/springs	1 year
Accessories	6 months

* Frame is defined as the welded metal base of the unit and does not include removable parts.

Product specifications subject to change without notice.

AURA SERIES (G3-S55) ROTARY TORSO

UNPACKING (G3-S55) ROTARY TORSO

Thank you for purchasing a MATRIX Fitness product. Your AURA SERIES (G3-S55) ROTARY TORSO is inspected before it is packaged. It is shipped in multiple pieces to facilitate the compact packaging of the machine. Prior to assembly, confirm all the components by matching them with the exploded diagrams. Carefully unpack the unit from this box and dispose of the packing materials in accordance with your local laws.

CAUTION

To avoid injury to yourself and prevent damage to the frame components, be sure to have proper assistance removing the frame pieces from this box. Please be sure to install the equipment on a stable base, properly level the machine and leave at least two feet of clearance to enter and exit the machine.

TOOLS REQUIRED FOR ASSEMBLY (not included)

3MM L-Shaped Allen Wrench	10MM L-Shaped Allen Wrench
4MM L-Shaped Allen Wrench	Phillips Screwdriver
5MM L-Shaped Allen Wrench	8MM Open-End Wrench
6MM L-Shaped Allen Wrench	17MM Open-End Wrench
8MM L-Shaped Allen Wrench	Guide Rod Lubrication

If any items are missing please contact your country's local MATRIX dealer for assistance.

Step 1

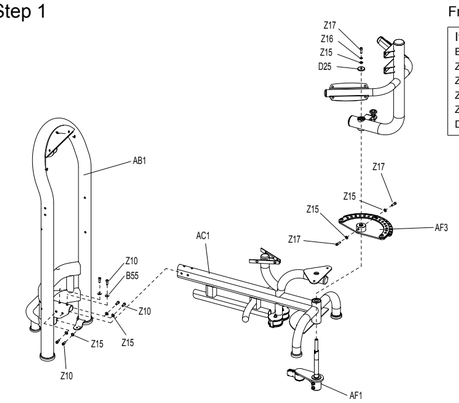

Frame Detail

Item	Description	Qty
B55	Arc-flat Washer	2
Z10	Screw	6
Z15	Flat Washer	7
Z16	Spring Washer	1
Z17	Screw	3
D25	Cover	1

Step 2

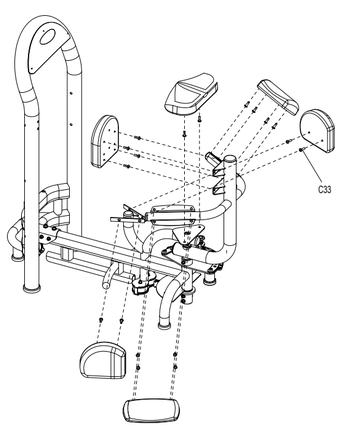

Upholstry Detail

Item	Description	Qty
C33	Screw	18

Step 3

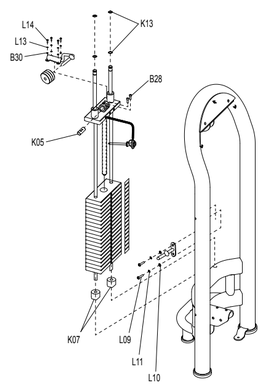

Accessory Detail

Item	Description	Qty
B28	Screw	2
B30	Flat Washer	4
K05	Knurled Belt Securing Insert	1
K07	Rubber Stack Cushions	2
K13	E-Clipper	4
L09	Screw	2
L10	Flat Washer	2
L11	Spring Washer	2
L13	Spring Washer	4
L14	Screw	4

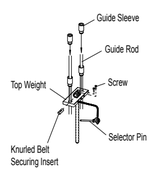

Step 4

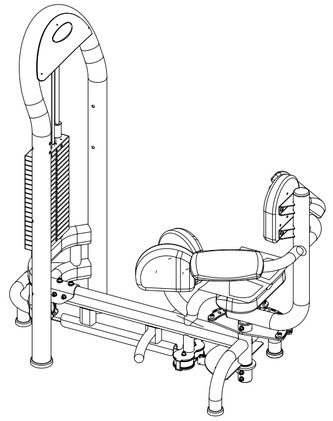

Belt Routing Detail

Item	Description	Qty
F20	Belt	1
F24	Belt Fixer	2
F31	Screw	4
F33	Flat Washer	4

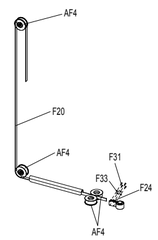

Step 5

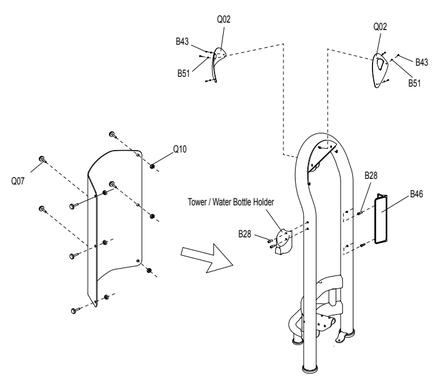

Accessory Detail

Item	Description	Qty
B28	Screw	4
B46	Nameplate	1
B43	Screw	6
B51	Washer	6
Q02	Upper Cover	2
Q07	Screw	6
Q10	Rubber Shield Spacer	6