MATRIX

AURA
SERIES

G3-MS24
G3-MS51
G3-MS52
G3-MS53
G3-MS20
G3-MS40
G3-MS50
G3-MS80

IMPORTANT SAFETY INFORMATION

It is the sole responsibility of the purchaser of MATRIX products to instruct all individuals, whether they are the end user or supervising personnel on proper usage of the equipment.

It is recommended that all users of MATRIX exercise equipment be informed of the following information prior to its use.

Do not use any equipment in any way other than designed or intended by the manufacturer. It is imperative that MATRIX equipment be used properly to avoid injury.

INSTALLATION

1. STABLE AND LEVEL SURFACE: MATRIX exercise equipment must be installed on a stable base and properly leveled.
2. SECURING EQUIPMENT: Manufacturer recommends that all stationary MATRIX strength equipment be secured to the floor to stabilize equipment and eliminate rocking or tipping over. This must be performed by a licensed contractor.

   All anchor points must be able to withstand 750 lbs. (3.3 kN) pull-out force.

MAINTENANCE

1. DO NOT use any equipment that is damaged and or has worn or broken parts. Use only replacement parts supplied by your country's local MATRIX dealer.
2. MAINTAIN LABELS AND NAMEPLATES: Do not remove labels for any reason. They contain important information. If unreadable or missing, contact your MATRIX dealer for a replacement.
3. MAINTAIN ALL EQUIPMENT: Preventative maintenance is the key to smooth operating equipment as well as keeping your liability to a minimum. Equipment needs to be inspected at regular intervals.
4. Ensure that any person(s) making adjustments or performing maintenance or repair of any kind is qualified to do so. MATRIX dealers will provide service and maintenance training at our corporate facility upon request.

ADDITIONAL NOTES

This equipment should only be used in supervised areas where access and control is specifically regulated by the owner. It is up to the owner to determine who is allowed access to this training equipment. The owner should consider a user's: degree of reliability, age, experience, etc.

This training equipment meets industry standards for stability when used for its intended purpose in accordance with the instructions provided by the manufacturer.

This training equipment is in compliance with EN 957-1 and the relevant portions of EN 957-2 and EN 957-4.

WARNING

NOT a stand-alone unit. MUST be connected to other units in a Matrix-approved configuration for added stability.

WARNING

DEATH OR SERIOUS INJURY CAN OCCUR ON THIS EQUIPMENT. FOLLOW THESE PRECAUTIONS TO AVOID INJURY!

1. Keep children under the age of 14 away from this strength training equipment. Teenagers must be supervised at all times while using this equipment.
2. This equipment is not intended for use by persons with reduced physical, sensory or mental capabilities, or lack of experience and knowledge, unless they have been given supervision or instruction concerning use of the equipment by a person responsible for their safety.
3. All warnings and instructions should be read and proper instruction obtained prior to use. Use this equipment for its intended purpose ONLY.
4. Inspect the machine before use. DO NOT use machine if it appears damaged or inoperable.
5. Do not exceed weight capacity of this equipment.
6. Check to see that the selector pin is completely inserted into the weight stack.
7. NEVER use the machine with the weight stack pinned in an elevated position.
8. NEVER use dumbbells or other means to incrementally increase the weight resistance. Only use the means provided directly from the manufacturer.
9. Injuries to health may result from incorrect or excessive training. Cease exercise if you feel faint or dizzy. Obtain a medical exam before beginning an exercise program.
10. Keep body, clothing, hair, and fitness accessories free and clear of all moving parts.
11. Adjustable stops, where provided, must be used at all times.
12. When adjusting any adjustable mechanism (stop position, seat position, pad location, range of motion limiter, pulley carriage, or any other type), make certain that the adjustable mechanism is fully engaged prior to use to prevent unintended motion.
13. Manufacturer recommends that this equipment be secured to the floor to stabilize and eliminate rocking or tipping over. Use a licensed contractor.
14. If equipment is NOT secured to floor: NEVER allow resistance straps, ropes or other means to be attached to this equipment, as this may result in serious injury. NEVER use this equipment for support during stretching, as this may result in serious injury.
15. DO NOT REMOVE THIS LABEL. REPLACE IF DAMAGED OR ILLEGIBLE.

General Selectorized

PROPER USAGE

1. Do not exceed weight limits of the exercise device.
2. If applicable, set safety stops to appropriate height.
3. If applicable, adjust seat pads, leg pads, foot pads, range of motion adjustment, or any other type of adjustment mechanisms to a comfortable start position. Make certain that the adjusting mechanism is fully engaged to prevent unintentional movement and to avoid injury.
4. Sit on bench (if applicable) and get into appropriate position for exercise.
5. Exercise using no more weight than you can safely lift and control.
6. In a controlled manner, perform exercise.
7. Return weight to its fully-supported start position.

WARRANTY

For North America, please visit **www.matrixfitness.com** for warranty information along with warranty exclusions and limitations.

MAINTENANCE CHECKLIST

ACTION	FREQUENCY
Clean Upholstery *	Daily
Inspect Cables	Daily
Clean Guide Rods	Monthly
Inspect Hardware	Monthly
Inspect Frame	Bi-Annually
Clean Machine	As Needed
Clean Grips *	As Needed
Lubricate Guide Rods †	As Needed

* Upholstery & Grips should be cleaned with a mild soap and water or a non-ammonia based cleaner.
† Guide rods should be lubricated with Teflon based lubricant. Apply the lubricant to a cotton cloth and then apply up and down the guide rods.

PRODUCT SPECIFICATIONS

	G3-MS24 Adjustable Pulley	G3-MS51 Lat Pulldown	G3-MS52 Triceps Pressdown	G3-MS53 Low Row	G3-MS20 Adjustable Cable Crossover	G3-MS40 4-Stack Multi-station	G3-MS50 5-Stack Multi-station	G3-MS80 8-Stack Multi-station
Max User Weight	136 kg / 300 lbs.							
Product Weight	90 kg / 198.5 lbs.	118 kg / 261 lbs.	80.5 kg / 177.5 lbs.	126 kg / 278 lbs.	399 kg / 880 lbs.	998 kg / 2200 lbs.	1197 kg / 2640 lbs.	1996 kg / 4400 lbs.
Overall Dimensions (L x W x H)*	68 x 70 x 240 cm / 27 x 28 x 94.5”	140 x 120 x 252 cm/ 55 x 47.5 x 99.5”	85 x 59 x 240 cm / 33.5 x 23.5 x 94.5”	230 x 71 x 240 cm / 91 x 28 x 94.5”	397.4 x 90 x 239.6 cm / 156.5 x 35.4 x 94.3”	167.8 x 369.8 x 252 cm / 66.1 x 145.6 x 99.2”	481.5 x 369.8 x 251.7 cm / 189.6 x 145.6 x 99.1”	561.3 x 145.6 x 251.7 cm / 221 x 57.3 x 99.1”
Weight Stack	91 kg / 200 lbs.	134 kg / 295 lbs.	91 kg / 200 lbs.	134 kg / 295 lbs.	2 x 91 kg / 2 x 200 lbs.	2 x 91 kg, 2 x 134 kg / 2 x 200 lbs., 2 x 295 lbs.	3 x 91 kg, 2 x 134 kg / 3 x 200 lbs., 2 x 295 lbs.	4 x 91 kg, 4 x 134 kg / 4 x 200 lbs., 4 x 295 lbs.

* Ensure a minimum clearance width of 0.6 meters (24”) for access to and passage around MATRIX strength equipment. Please note, 0.91 meters (36”) is the ADA recommended clearance width for individuals in wheelchairs.

UNPACKING

Thank you for purchasing a MATRIX Fitness product. It is inspected before it is packaged. It is shipped in multiple pieces to facilitate the compact packaging of the machine. Prior to assembly, confirm all the components by matching them with the exploded diagrams. Carefully unpack the unit from this box and dispose of the packing materials in accordance with your local laws.

CAUTION

To avoid injury to yourself and prevent damage to the frame components, be sure to have proper assistance removing the frame pieces from this box. Please be sure to install the equipment on a stable base, and properly level the machine. Ensure a minimum clearance width of 0.6 meters (24”) for access to and passage around MATRIX strength equipment. Please note, 0.91 meters (36”) is the ADA recommended clearance width for individuals in wheelchairs.

TOOLS REQUIRED FOR ASSEMBLY (not included)

3MM L-Shaped Allen Wrench	
4MM L-Shaped Allen Wrench	
5MM L-Shaped Allen Wrench	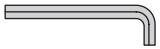
6MM L-Shaped Allen Wrench	
8MM L-Shaped Allen Wrench	
10MM L-Shaped Allen Wrench	
Phillips Screwdriver	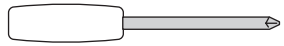
8MM Open-End Wrench	
17MM Open-End Wrench	
Guide Rod Lubrication	

If any items are missing please contact your country’s local MATRIX dealer for assistance.

G3-MS24

TECH SPECS	
Maximum Training Weight	91 kg / 200 lbs.
Product Weight	90 kg / 199 lbs.
Overall Dimensions (L x W x H)*	68 x 70 x 240 cm / 27” x 28” x 94.5”
* Ensure a minimum clearance width of 914 mm / 36” for access to and passage around MATRIX strength equipment.	

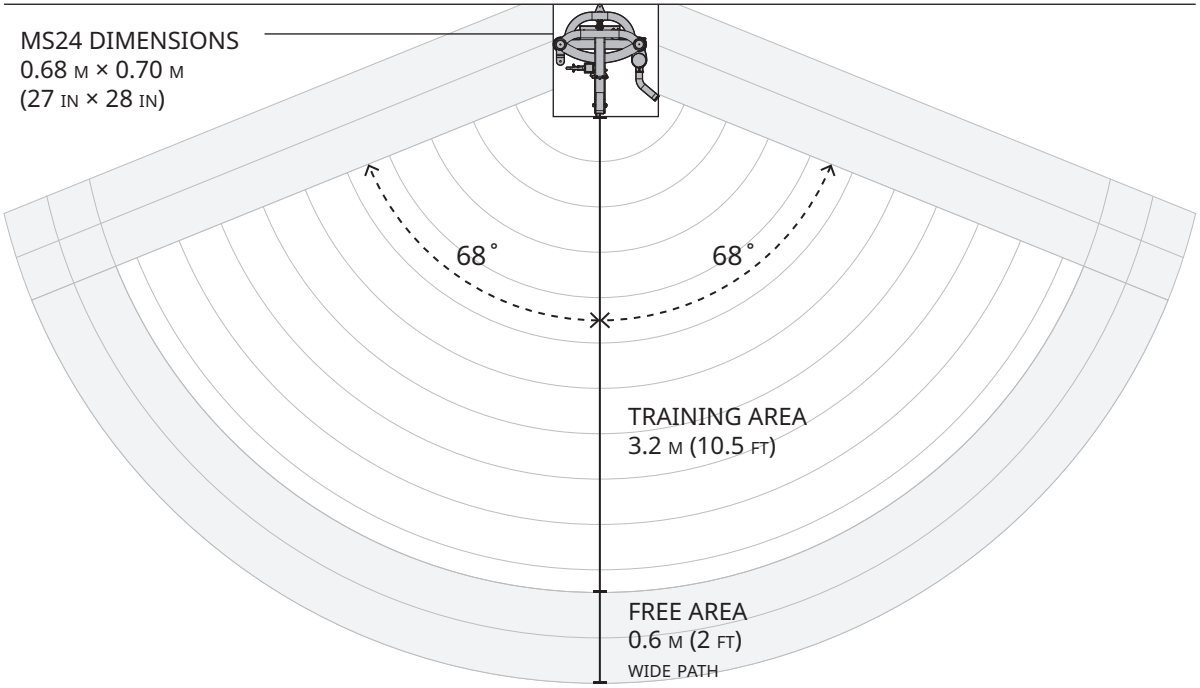

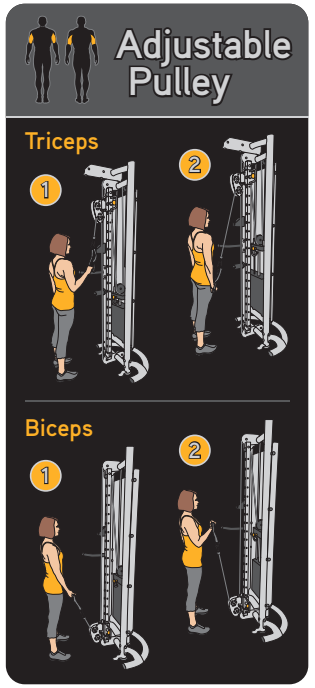

G3-MS24

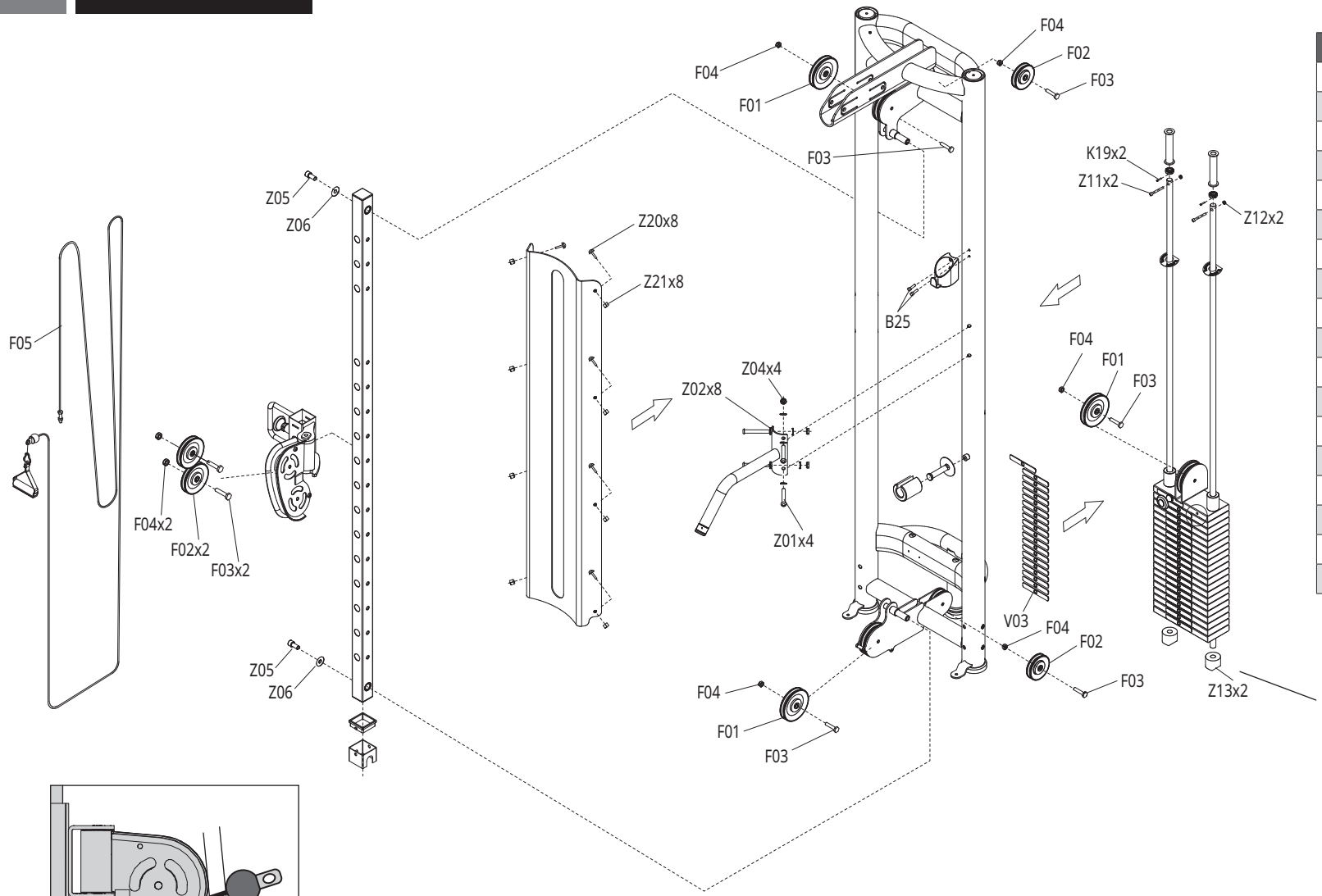

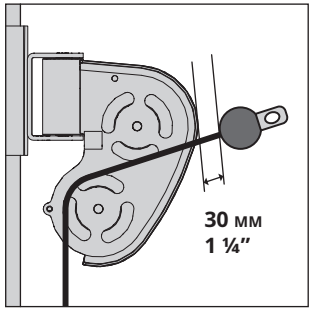

	DESCRIPTION	QTY
Z01	Screw, Oval-Hex Socket (M10x100L)	4
Z02	Arc-flat Washer	8
Z04	Nylon Nut (M10)	4
Z05	Screw, Oval-Hex Socket (M12x25L)	2
Z06	Flat Washer (M12)	2
Z11	Screw, Oval-Hex Socket (M6x45L)	2
Z12	Nylon Nut (M6)	2
Z13	Rubber Stack Cushions	2
B25	Screw, Oval-Hex Socket (M8x30L)	2
V03	Sticker, Weight Stack Plate	1
F01	Pulley (115mm)	3
F02	Pulley (90 mm)	4
F03	Bolt, hex-head	7
F04	Nylon Nut (M10)	7
F05	Cable	1
Z20	Rubber Tip Weight Shield Bolt	8
Z21	Rubber Shield	8
K19	Screw, Oval-Hex Socket (M6x15L)	2

NOTE:
Before attaching weight plate decals, be sure to verify the head plate is positioned on the weight stack so that the bolt attaching the pull pin to the head plate is positioned behind the chrome adjustment tube.

G3-MS51

TECH SPECS	
Maximum Training Weight	134 kg / 295 lbs.
Product Weight	118 kg / 261 lbs.
Overall Dimensions (L x W x H)*	140 x 120 x 252 cm / 55 x 47.5 x 99.5”
* Ensure a minimum clearance width of 914 mm / 36” for access to and passage around MATRIX strength equipment.	

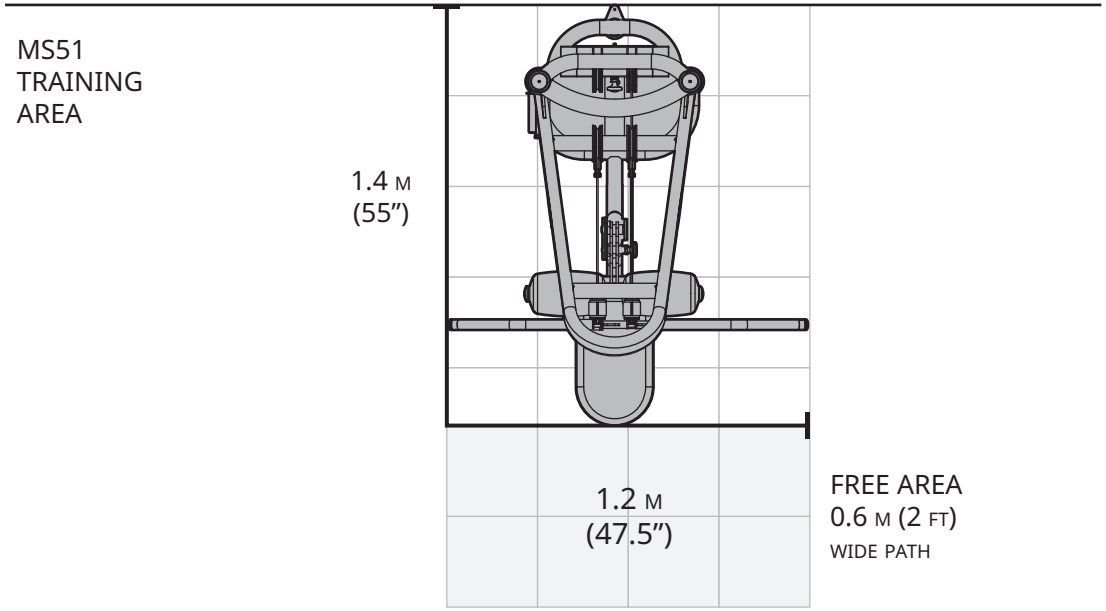

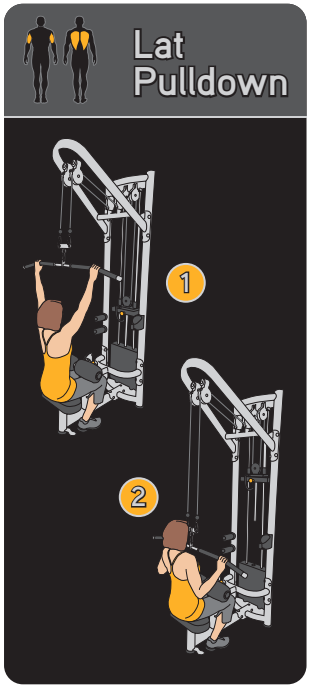

G3-MS51

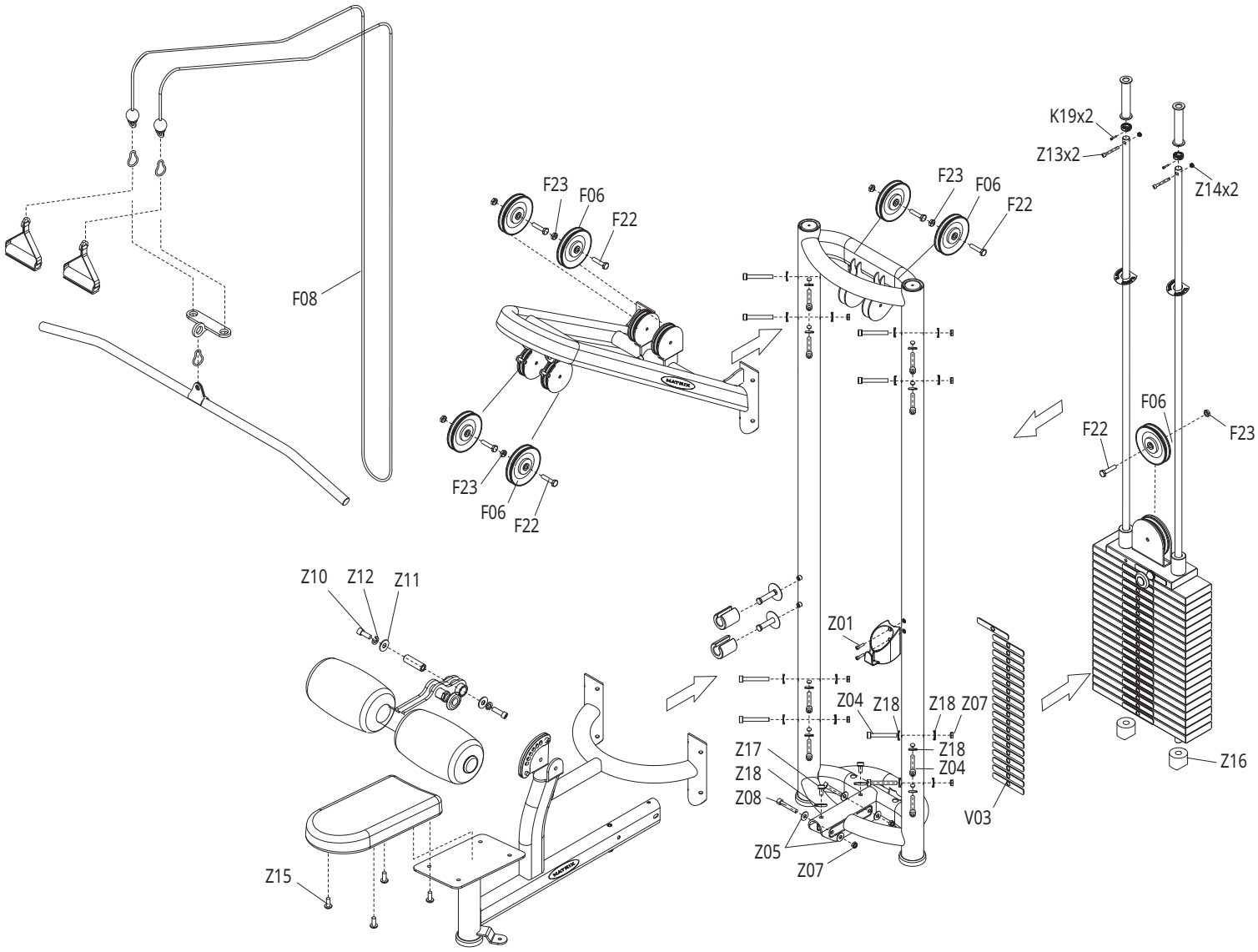

	DESCRIPTION	QTY
Z01	Screw, Round-Hex Socket (M8x30L)	2
Z04	Screw, Round-Hex Socket (M10x100L)	16
Z05	Flat Washer (M10)	4
Z07	Nylon Nut (M10)	18
Z08	Screw, Round-Hex Socket (M10x80L)	2
Z17	Screw, Round-Hex Socket (M10x25L)	2
Z18	Arc-flat Washer	34
Z10	Screw, Round-Hex Socket (M12x25L)	2
Z11	Flat Washer (M12)	2
Z12	Lock Washer (M12)	2
Z13	Screw, Round-Hex Socket (M6x45L)	2
Z14	Nylon Nut (M6)	2
Z15	Screw, Oval-Hex Socket (M10x35L)	3
Z16	Rubber Stack Cushions	2
V03	Sticker, Weight Stack Plate	1
F06	Pulley	7
F08	Cable	1
F22	Bolt, hex-head	7
F23	Nylon Nut (M10)	7
K19	Screw, Round-Hex Socket (M6x15L)	2

G3-MS52

TECH SPECS	
Maximum Training Weight	91 kg / 200 lbs.
Product Weight	80.5 kg / 178 lbs.
Overall Dimensions (L x W x H)*	85 x 59 x 240 cm / 33.5” x 23.5” x 94.5”
* Ensure a minimum clearance width of 914 mm / 36” for access to and passage around MATRIX strength equipment.	

MS52
TRAINING
AREA

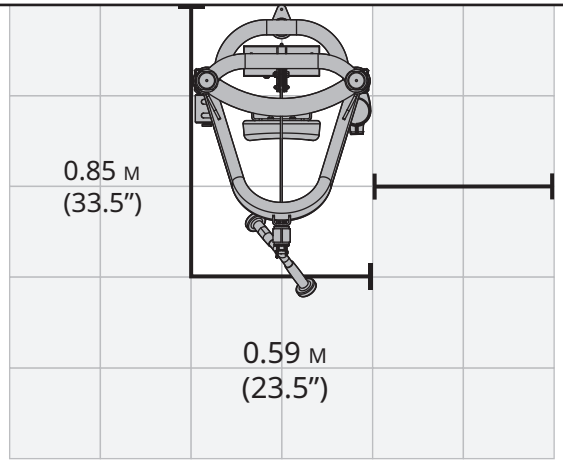

FREE AREA
0.6 M (2 FT)
WIDE PATH

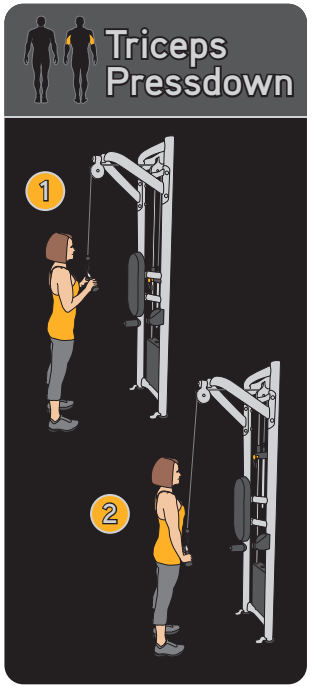

G3-MS52

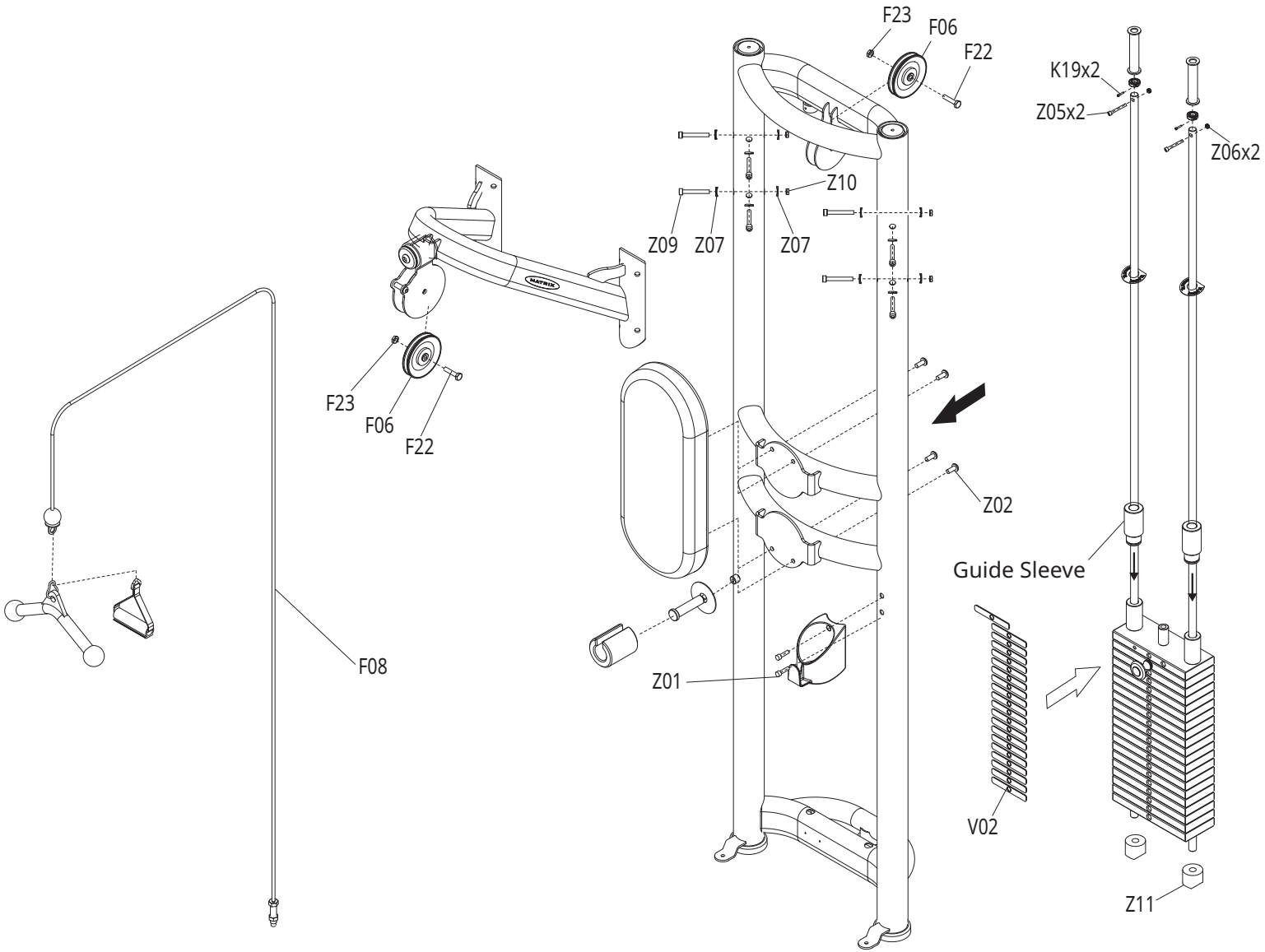

	DESCRIPTION	QTY
Z01	Screw, Oval-Hex Socket (M8x30L)	2
Z02	Screw, Oval-Hex Socket (M10x35L)	4
Z05	Screw, Oval-Hex Socket (M6x45L)	2
Z06	Nylon Nut (M10)	2
Z07	Arc-flat Washer	16
Z09	Screw, Oval-Hex Socket (M10x90L)	8
Z10	Nylon Nut (M10)	8
Z11	Rubber Stack Cushions	2
V02	Sticker, Weight Stack Plate	1
F06	Pulley	2
F08	Cable	1
F22	Bolt, hex-head	2
F23	Nylon Nut (M10)	2
K19	Screw, Oval-Hex Socket (M6x15L)	2
V02	Sticker, Weight Stack Plate	1

G3-MS53

TECH SPECS	
Maximum Training Weight	134 kg / 295 lbs.
Product Weight	126 kg / 278 lbs.
Overall Dimensions (L x W x H)*	230 x 71 x 240 cm / 91” x 28” x 94.5”
* Ensure a minimum clearance width of 914 mm / 36” for access to and passage around MATRIX strength equipment.	

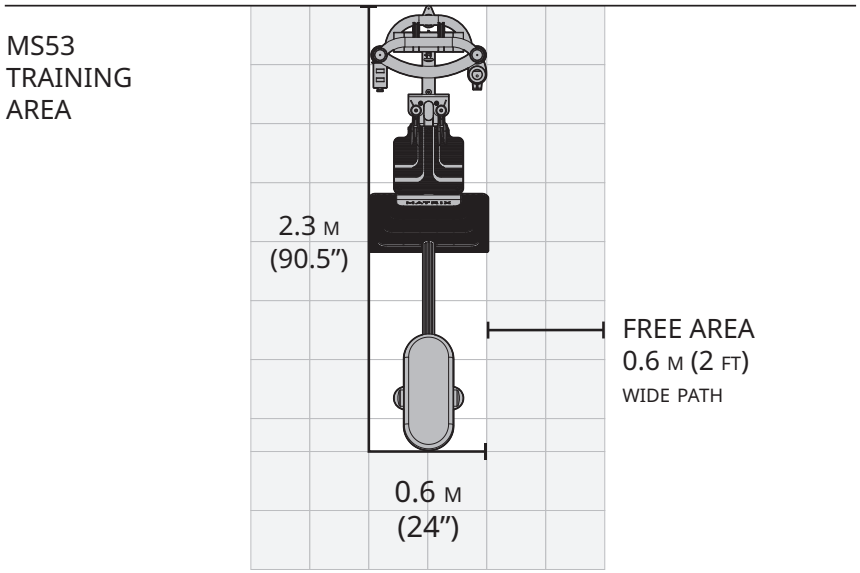

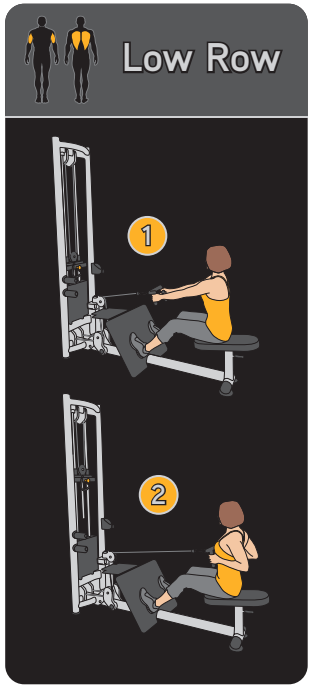

G3-MS53

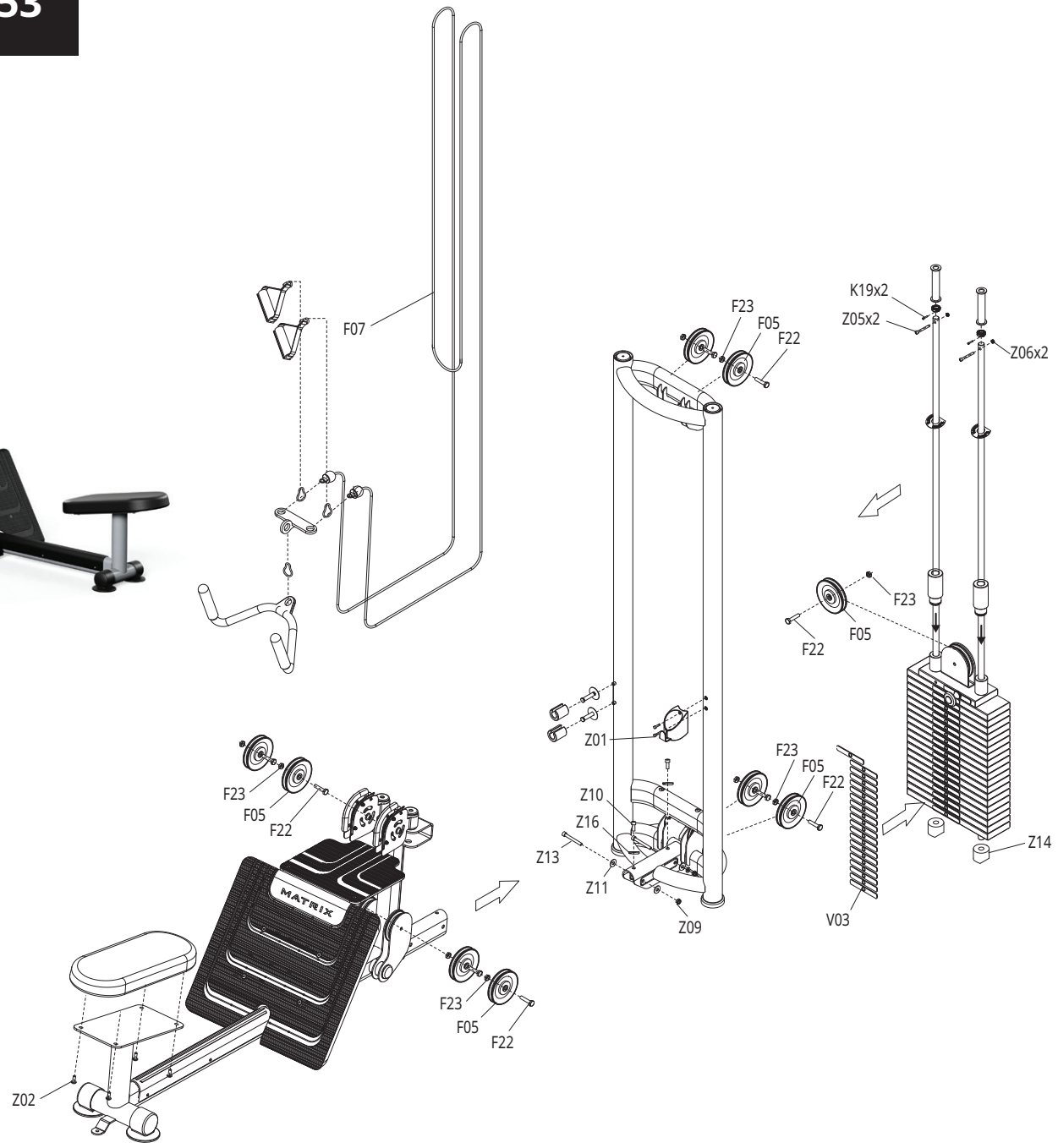

	DESCRIPTION	QTY
Z01	Screw, Oval-Hex Socket (M8x30L)	2
Z02	Screw, Oval-Hex Socket (M10x35L)	4
Z05	Screw, Oval-Hex Socket (M6x25L)	2
Z06	Nylon Nut (M6)	2
Z09	Nylon Nut (M10)	2
Z10	Screw, Oval-Hex Socket (M10x25L)	2
Z11	Flat Washer (M10)	4
Z13	Screw, Oval-Hex Socket (M10x80L)	2
Z14	Rubber Stack Cushions	2
Z16	Arc-flat Washer	2
V03	Sticker, Weight Stack Plate	1
F05	Pulley	9
F07	Cable	1
F22	Bolt, hex-head	9
F23	Nylon Nut (M10)	9
K19	Screw, Oval-Hex Socket (M6x15L)	2

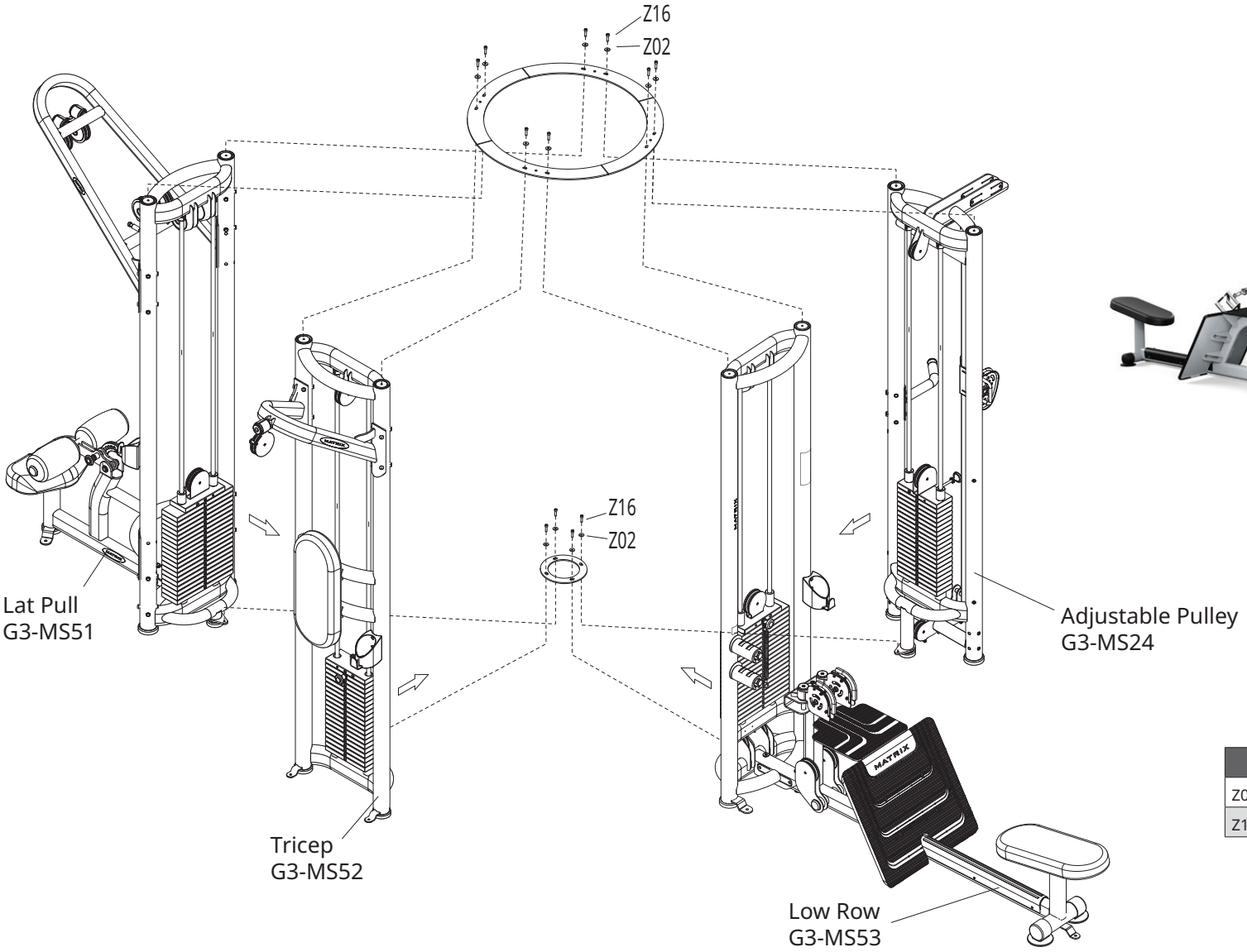

	DESCRIPTION	QTY
Z02	Flat Washer (M8)	12
Z16	Screw, Round-HS (M8x30L)	12

G3-MS50

5 Stack - Step 1 of 3
Sample Configuration

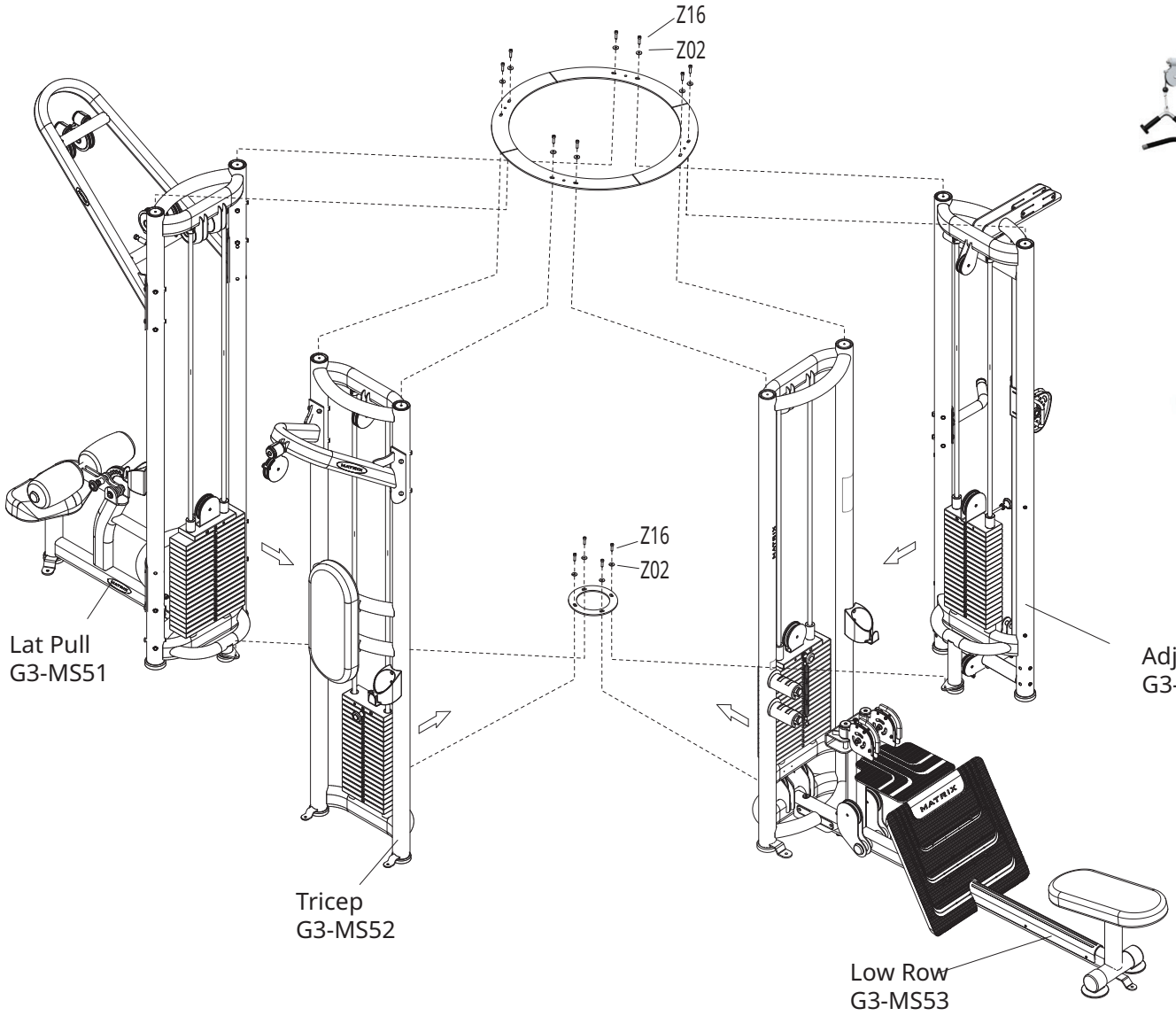

	DESCRIPTION	QTY
Z02	Flat Washer (M8)	12
Z16	Screw, Round-HS (M8x30L)	12

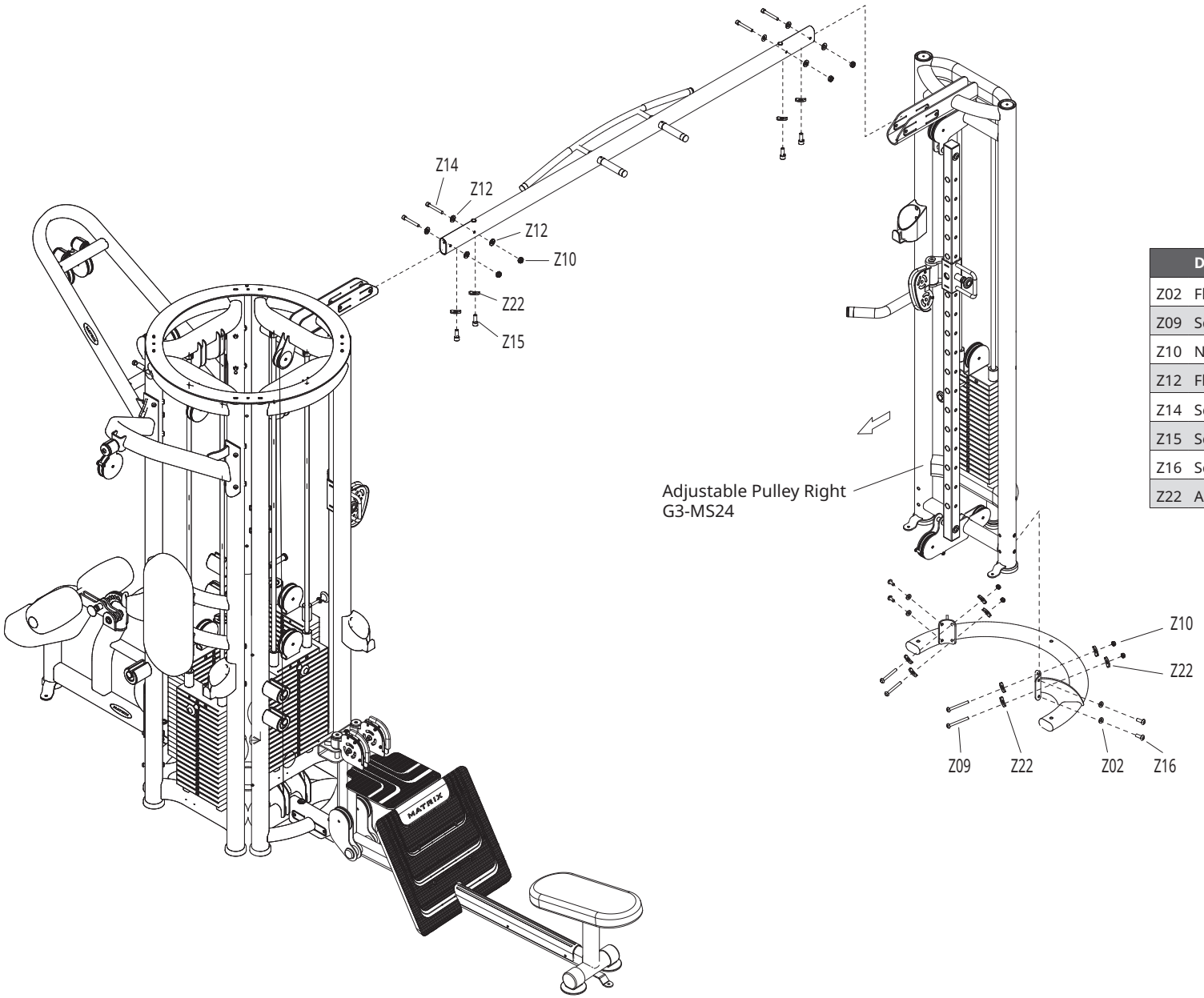

	DESCRIPTION	QTY
Z02	Flat Washer (M8)	4
Z09	Screw, Oval-HS(M10x100L)	4
Z10	Nylon Nut (M10)	8
Z12	Flat Washer (M10)	8
Z14	Screw, Round-HS(M10x80L)	4
Z15	Screw, Round-HS(M10x25L)	4
Z16	Screw, Oval-HS(M8x25L)	4
Z22	Arc Washer	12

5 Stack - Step 3 of 3
Sample Configuration

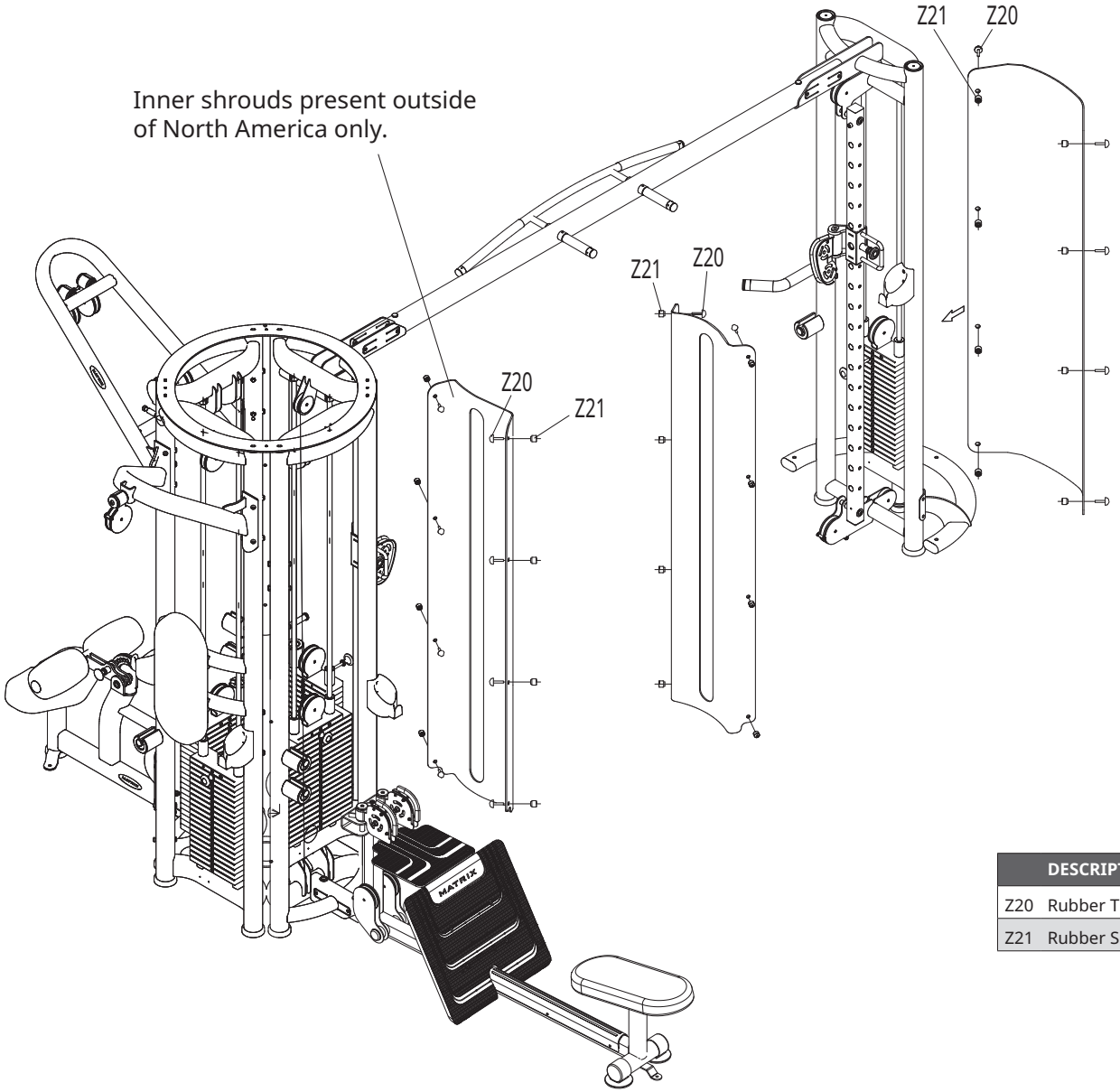

	DESCRIPTION	QTY
Z20	Rubber Tip Weight Shield Bolt	24
Z21	Rubber Shield	24

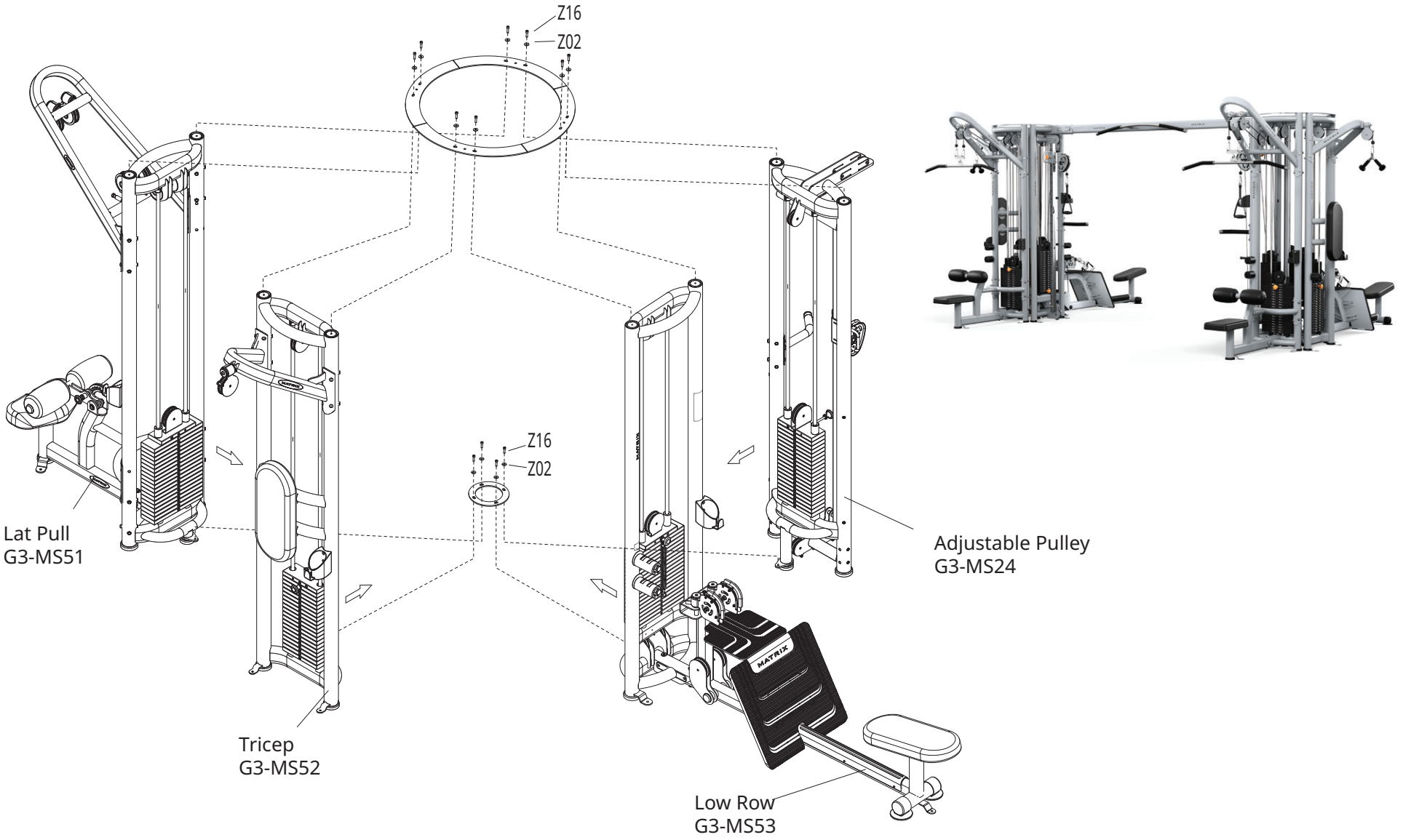
Z16
Z02
Z16
Z02
Lat Pull
G3-MS51
Tricep
G3-MS52
Low Row
G3-MS53
Adjustable Pulley
G3-MS24
MATRIX

8 Stack - Step 2 of 3
Sample Configuration

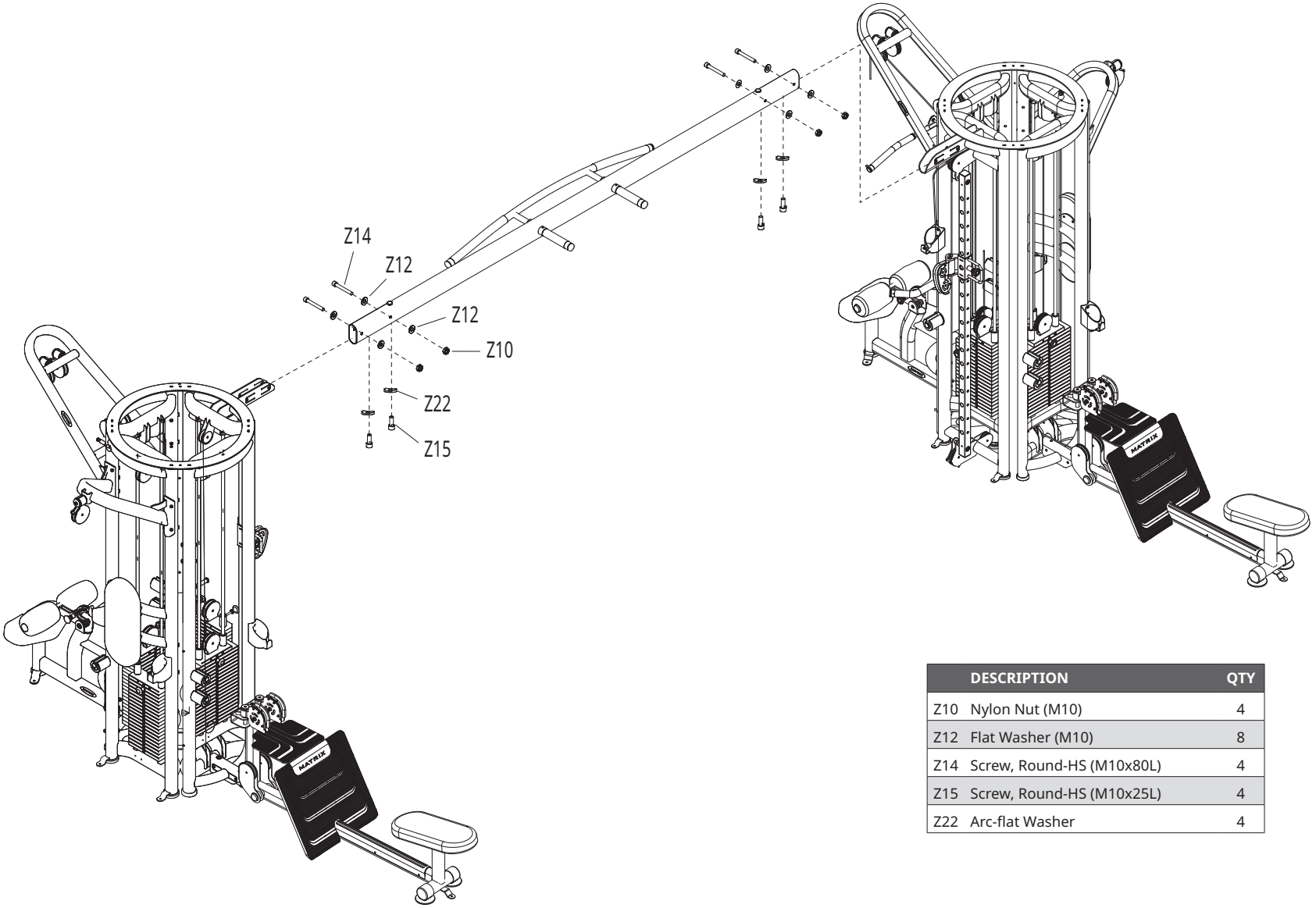

	DESCRIPTION	QTY
Z10	Nylon Nut (M10)	4
Z12	Flat Washer (M10)	8
Z14	Screw, Round-HS (M10x80L)	4
Z15	Screw, Round-HS (M10x25L)	4
Z22	Arc-flat Washer	4

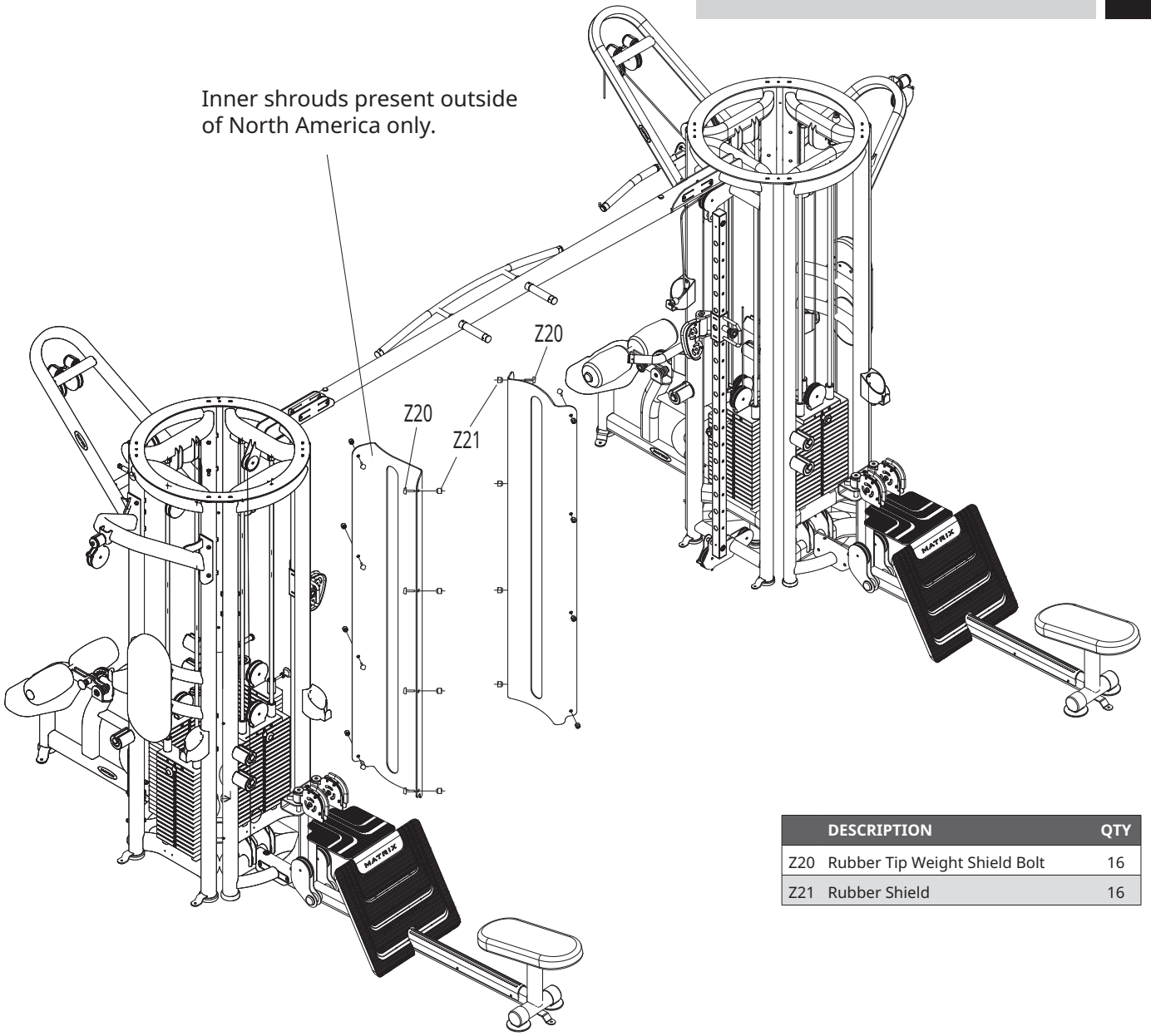

	DESCRIPTION	QTY
Z20	Rubber Tip Weight Shield Bolt	16
Z21	Rubber Shield	16

MATRIX

G3-MS24 / G3-MS51 / G3-MS52 / G3-MS53 / G3-MS20 / G3-MS40 / G3-MS50 / G3-MS80

© 2017 Johnson Health Tech

Part # 1000417314
Rev 1.4 ENGLISH